GENERAL NOTES:

1. SCOPE OF WORK: The Contractor shall furnish all labor, machinery, tools, supplies, and equipment as necessary to construct and provide an operating system, as indicated in the Plans. The work shall include, but not be limited to, furnishing materials (pipe, valves, sprinkler heads, fittings, controllers, electrical, wire and fittings, primer, glue, etc.), layout, protection to the public, excavation, assembly, installation, backfilling, compaction, repair of road or pavement surfaces, controller and low voltage feed to the valves, clean-up, maintenance and guarantee, and as-built plans.

2. Contractor shall coordinate with General Contractor or other pertinent Contractors on the job to insure that sleeves are provided and installed under hard surfaces to allow access to all areas to be irrigated. All sleeves shall be constructed of Class 200 PVC. Bury all sleeves a minimum of 18" below the surface. Sleeve to be double the size if the pipe running through it. Sleeve shall extend 24" past the edge of pavement into the area to be irrigated.

3. GUARANTEE: The irrigation system shall be guaranteed for a minimum of one calendar year from the time of final acceptance.

4. REPAIR UTILITIES: The Contractor shall be responsible to verify the location of all utilities by hand excavation or other appropriate measures before performing any work that may result in damage to utilities structures, or property. The Contractor shall take immediate steps to repair, replace, or restore all services to any utilities which are disrupted due to his operations. All costs involved in disruption of service and repairs due to negligence on part of the Contractor shall be his responsibility.

5. AS-BUILT DRAWINGS: Prints of the plans will be supplied to the Contractor for recording "as-built" information. Immediately upon installation of any work which deviates from what is shown on the Plans, the Contractor shall clearly indicate such changes in red pencil on the prints. Such changes shall include, but not be limited to, changes in (1) materials; (2) sizes of material; (3) location; and (4) quantities.

6. The entire installation shall fully comply with all applicable local and state codes and ordinances. The Contractor shall take out all required plumbing and electrical applications and permits, arrange for all necessary inspections and shall pay all fees and expenses in connection with same as part of work under the contract.

7. UNIT PRICES: The successful bidder shall furnish, to the Owner, a unit price breakdown for all materials. The Owner may at his own discretion, add to or delete from the materials, using the unit price breakdown submitted to and accepted by the Owner.

8. MAINTENANCE PERIOD: The irrigation system shall be maintained for a period of 90 days after final acceptance of installation. Maintenance shall include checking of the system 2 times per week. Contractor shall be responsible to replace/repair any broken or malfunctioning parts of the system including those damaged by accidents or vandalism. Repairs shall be made immediately at the time of inspection or when notified by the Landscape Architect.

9. The irrigation system shall provide 100% coverage with a minimum of 90% overlap of water spray.

10. The system is design to provide sprinkler precipitation rates that are nearly equal in each zone. Mixing of sprinklers with widely varying precipitation rates in a zone will not be accepted.

11. Irrigation mainline shall be made of Class 200 PVC and all laterals shall be Class 200 PVC, except flexible PVC (or Toro funny pipe) for flexible swing joint and Schedule 40 PVC risers for spray heads in shrub areas. Schedule 80 galvanized steel pipe is to be used for all above ground fittings. Pipe locations shall be adjusted in the field. When laying out mains and laterals, locate pipe near edges of pavement or against buildings wherever possible, to allow space for plant rootballs. Coordinate pipe locations with plantings. Bury all mains and laterals 18" min. below surface. Depth shall be measured to top of pipe.

12. Keep pop-up sprinkler heads a minimum of 8" from edges of pavement and curbing, and heads on risers a minimum of 18", or as indicated in the pans.

13. All heads located in shrub or groundcover beds shall be installed on a riser as per details in the plans. All other heads shall be installed on a swing joint as per details in the plans.

14. Place irrigation control wire in conduit in the same trench as mains and under the main. ASI wire shall be #14 or larger solid copper U.L. approved underground direct burial cable and shall be continuous with no splices from controller to solenoid valve.

15. Valve locations are schematic and shall be adjusted in the field. Each valve shall be in a separate valve box (10" x 16") min.). When grouping valve boxes in grass or groundcover areas, set boxes a minimum of 12" apart to allow grass or groundcover to grow between them. When possible, hide valve boxes in shrub beds, a minimum of 12" from edge of beds. Set all valve boxes, concrete or plastic, in ground with cover flush with finish grade, and level, with a minimum of 6" of pea gravel at the bottom of the box, with at least 2" of clearance from the bottom of the valve to the top of the gravel.

16. TESTING: Notify the Landscape Architect in writing when testing will be conducted. Conduct test in the presence of the Landscape Architect. After all PVC assembly is completed the lines shall be flushed to insure that no rocks, sand, or other foreign debris remains in the lines. The mains shall be filled with water and all outlets shall be capped and plugged. The main shall be pressurized to 100 PSI for a minimum of one hour. No section of the main will be approved if the pressure drops more than 5 PSI at the end of the one hour period. Leaks shall be repaired immediately and the system shall be re-tested until found satisfactory by the Landscape Architect.

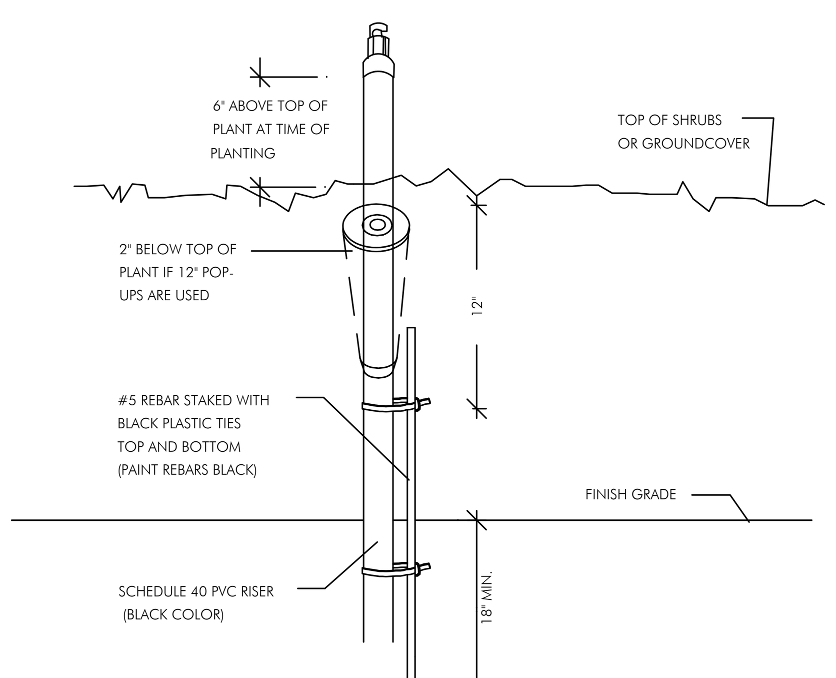

SPRINKLER ON RISER DETAIL FOR SHRUB AREAS

N.T.S.

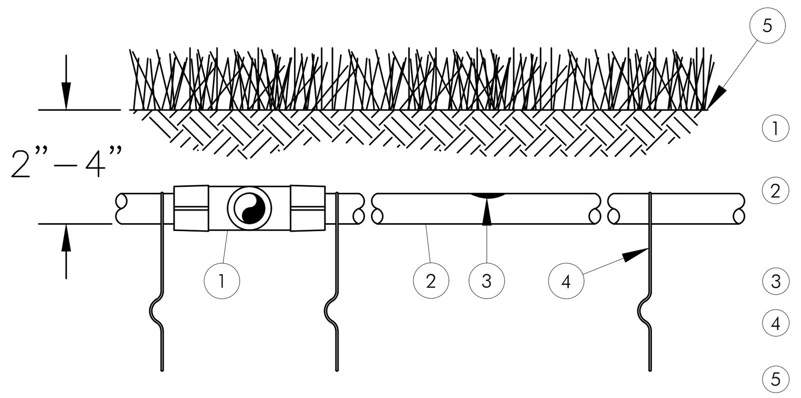

1. EASY FIT COMPRESSION TEE: RAIN BIRD MDCFTEE
2. SUB-SURFACE DRIPLINE: RAIN BIRD XF SERIES DRIPLINE POTABLE: XFS DRIPLINE NON-POTABLE: XFSP DRIPLINE
3. INLINE DRIP EMITTER
4. TIE DOWN STAKE: RAIN BIRD TDS-050 WITH BEND (TYPICAL)
5. TURF/FINISH GRADE OR SHRUB BED WITH MULCH

NOTES:
1. PLACE TIE DOWN STAKES EVERY THREE FEET IN SAND, FOUR FEET IN LOAM, AND FIVE FEET IN CLAY.
2. AT FITTINGS WHERE THERE IS A CHANGE OF DIRECTION SUCH AS TEES OR ELBOWS, USE TIE-DOWN STAKES ON EACH LEG OF THE CHANGE OF DIRECTION.
3. INSERTION PLOW AND TRENCHED INSTALLATIONS DO NOT REQUIRE TIE DOWN STAKES.

XFS SUBSURFACE DRIPLINE BURIAL

N.T.S.

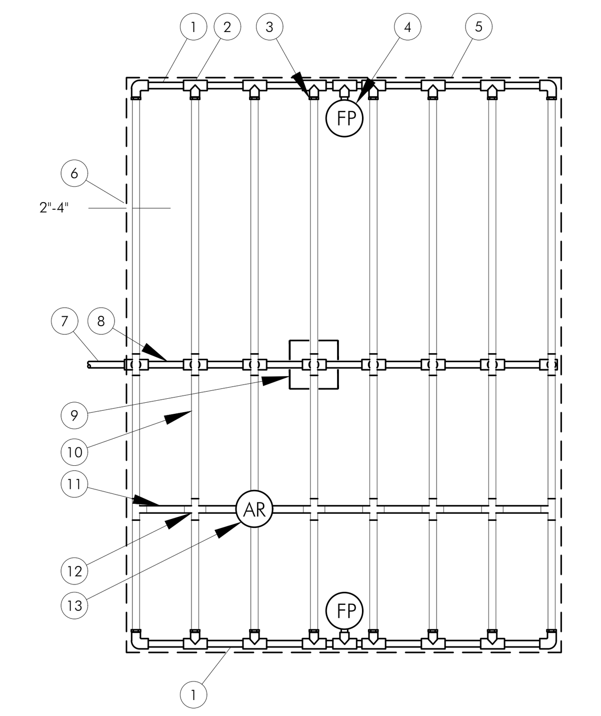

1. PVC EXHAUST HEADER
2. PVC SCH 40 TEE OR EL (TYPICAL)
3. BARB X MALE FITTING: RAIN BIRD XFF-MA FITTING (TYPICAL)
4. FLUSH POINT (TYPICAL) SEE RAIN BIRD DETAIL "XFS FLUSH POINT" OR "XFS FLUSH POINT WITH BALL VALVE"
5. PERIMETER OF AREA
6. PERIMETER DRIPLINE PIPE TO BE INSTALLED 2"-4" FROM PERIMETER OF AREA
7. PVC SUPPLY PIPE FROM RAIN BIRD CONTROL ZONE KIT (SIZED TO MEET LATERAL FLOW DEMAND)
8. PVC SUPPLY MANIFOLD
9. CONNECTION FROM SUPPLY MANIFOLD TO DRIPLINE (TYPICAL)- SEE INSET A
10. SUB-SURFACE DRIPLINE: RAIN BIRD XF SERIES DRIPLINE (TYPICAL) POTABLE: XFS DRIPLINE NON-POTABLE: XFSP DRIPLINE
11. RAIN BIRD XF SERIES BLANK TUBING
12. BARB X BARB INSERT TEE OR CROSS: RAIN BIRD XFF-TEE OR RAIN BIRD XFD-CROSS (TYPICAL)
13. ½" AIR RELIEF VALVE: RAIN BIRD MODEL: ARV050 SEE RAIN BIRD XFS DETAILS FOR AIR RELIEF INSTALLATION
14. BARB X FEMALE FITTING: RAIN BIRD XFD-TFA-075 FITTING
15. ¾" PVC NIPPLE, LENGTH AS NECESSARY

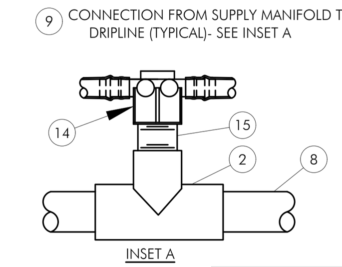

XFS Dripline Maximum Lateral Lengths (Feet)						
Inlet Pressure psi	12" Spacing		18" Spacing		24" Spacing	
	Nominal Flow (gph)		Nominal Flow (gph)		Nominal Flow (gph)	
	0.6	0.9	0.6	0.9	0.6	0.9
15	273	155	314	250	424	322
20	318	169	353	294	508	368
30	360	230	413	350	586	414
40	395	255	465	402	652	474
50	417	285	528	420	720	488
60	460	290	596	455	780	514

NOTES:
1. DISTANCE BETWEEN LATERAL ROWS AND EMITTER SPACING TO BE BASED ON SOIL TYPE, PLANT MATERIALS AND CHANGES IN ELEVATION. SEE RAIN BIRD XF-SDI DRIPLINE INSTALLATION GUIDE FOR SUGGESTED SPACINGS.
2. LENGTH OF LONGEST DRIPLINE LATERAL SHOULD NOT EXCEED THE MAXIMUM LENGTH SHOWN IN THE ACCOMPANYING TABLE.
3. AIR RELIEF VALVE TO BE INSTALLED AT HIGH POINT OF AREA.
4. WHEN USING 17MM INSERT FITTINGS WITH DESIGN PRESSURE OVER 50PSI, IT IS RECOMMENDED THAT STAINLESS STEEL CLAMPS BE INSTALLED ON EACH FITTING.

XFS SUBSURFACE DRIPLINE CENTERFEED LAYOUT

N.T.S.

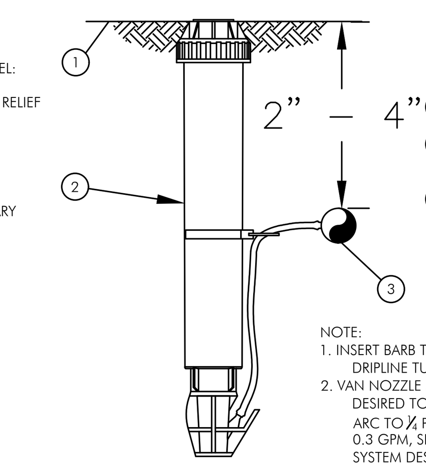

1. FINISH GRADE/TURF
2. OPERATION INDICATOR RAIN BIRD MODEL: OPERIND
3. SUB-SURFACE DRIPLINE: RAIN BIRD XF SERIES DRIPLINE POTABLE: XFS DRIPLINE NON-POTABLE: XFSP DRIPLINE

NOTE:
1. INSERT BARB TRANSFER FITTING DIRECTLY INTO DRIPLINE TUBING.
2. VAN NOZZLE MAY BE SET TO CLOSED, OR IF IT IS DESIRED TO SEE SPRAY FROM THE NOZZLE, SET THE ARC TO ¼ PATTERN. THE FLOW FROM THE NOZZLE, 0.3 GPM, SHOULD BE ACCOUNTED FOR IN THE SYSTEM DESIGN.

XFS SUBSURFACE DRIPLINE OPERATION INDICATOR

N.T.S.

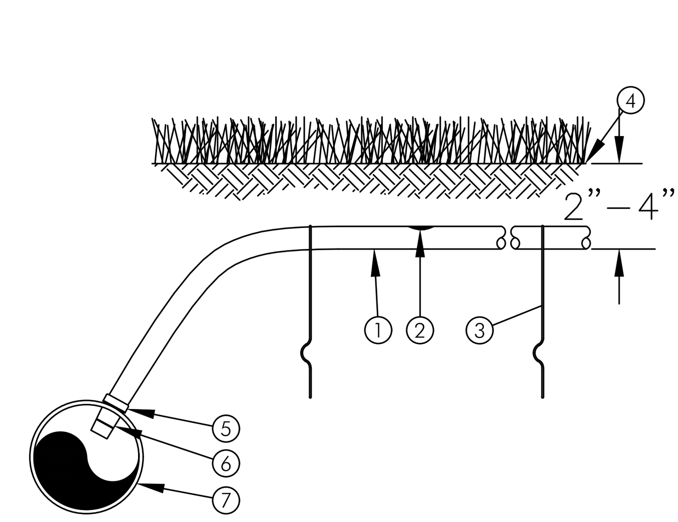

1. SUB-SURFACE DRIPLINE: RAIN BIRD XF SERIES DRIPLINE POTABLE: XFS DRIPLINE NON-POTABLE: XFSP DRIPLINE
2. INLINE DRIP EMITTER OUTLET
3. TIE DOWN STAKE: RAIN BIRD TDS-050 WITH BEND (TYPICAL)
4. TURF/FINISH GRADE OR SHRUB BED WITH MULCH
5. RATCHET CLAMP (INCLUDED WITH ADAPTER)
6. INSERT ADAPTER FOR PVC PIPE: RAIN BIRD XFD-INVPC
7. PVC LATERAL PIPE MINIMUM 1½" IN DIAMETER DEPTH PER SPECIFICATION

NOTES:
1. PLACE TIE DOWN STAKES EVERY THREE FEET IN SAND, FOUR FEET IN LOAM, AND FIVE FEET IN CLAY.
2. AT FITTINGS WHERE THERE IS A CHANGE OF DIRECTION SUCH AS TEES OR ELBOWS, USE TIE-DOWN STAKES ON EACH LEG OF THE CHANGE OF DIRECTION.
3. INSERTION PLOW AND TRENCHED INSTALLATIONS DO NOT REQUIRE TIE DOWN STAKES.

XFS SUBSURFACE DRIPLINE ADAPTER FOR PVC

N.T.S.

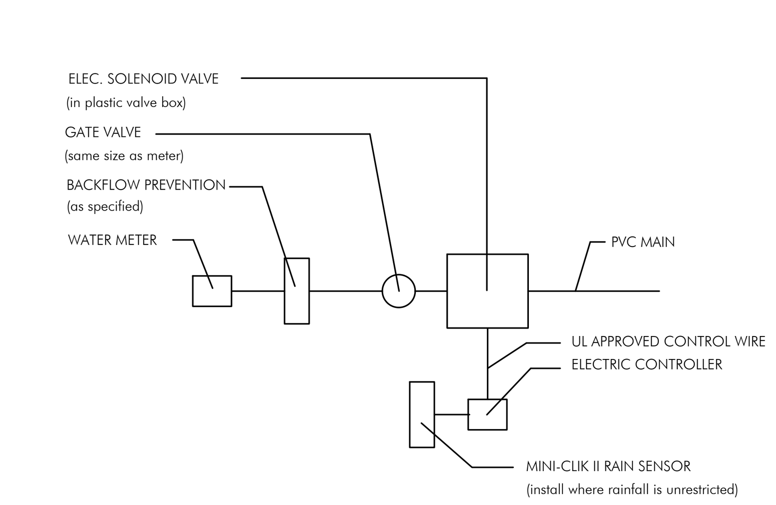

CONNECTION TO METER DETAIL

N.T.S.

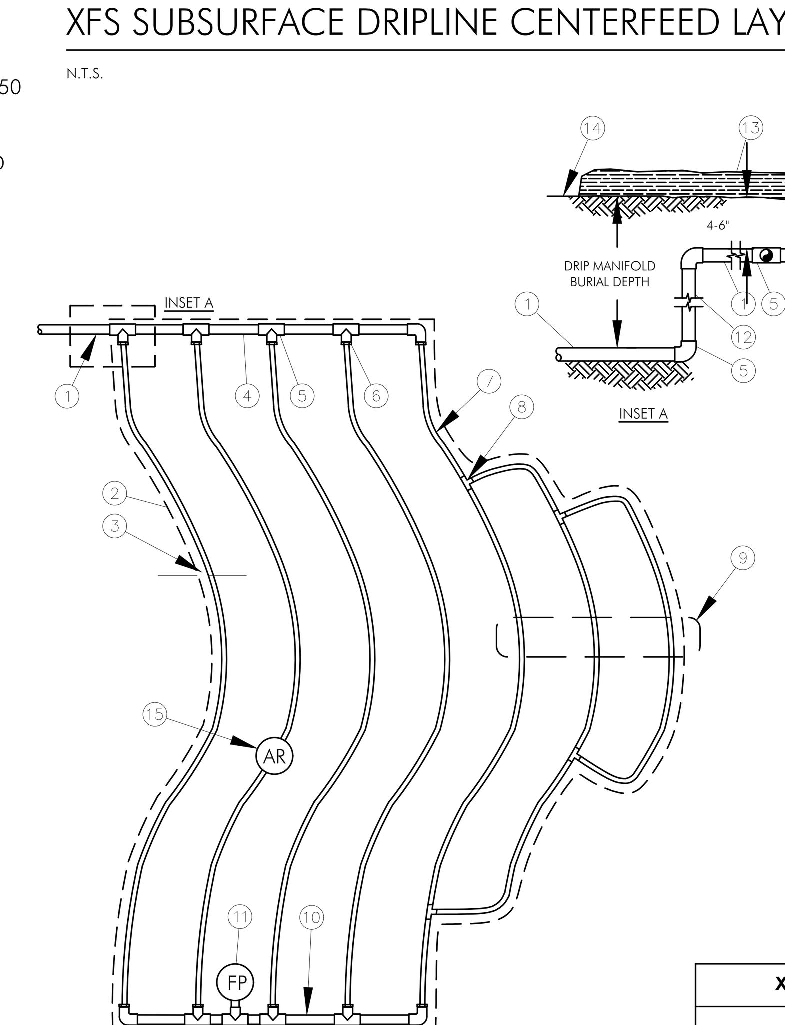

1. PVC SUPPLY PIPE FROM RAIN BIRD CONTROL ZONE KIT (SIZED TO MEET LATERAL FLOW DEMAND)
2. PERIMETER OF AREA
3. PERIMETER DRIPLINE PIPE TO BE INSTALLED 2"-4" FROM PERIMETER OF AREA
4. PVC SUPPLY MANIFOLD
5. PVC SCH 40 TEE OR EL (TYPICAL)
6. BARB X MALE FITTING: RAIN BIRD XFF-MA FITTING (TYPICAL)
7. SUB-SURFACE DRIPLINE: RAIN BIRD XF SERIES DRIPLINE (TYPICAL) POTABLE: XFS DRIPLINE NON-POTABLE: XFSP DRIPLINE
8. BARB X BARB INSERT TEE: RAIN BIRD XFF-TEE (TYPICAL)
9. TOTAL LENGTH OF SELECTED DRIPLINE SHOULD NOT EXCEED LENGTH SHOWN IN TABLE
10. PVC FLUSH HEADER
11. FLUSH POINT: SEE RAIN BIRD XFS DETAILS FOR FLUSH POINT INSTALLATION
12. PVC RISER PIPE
13. TURF OR MULCH
14. FINISH GRADE
15. ½" AIR RELIEF VALVE: RAIN BIRD MODEL: ARV050 SEE RAIN BIRD XFS DETAILS FOR AIR RELIEF INSTALLATION

XFS Dripline Maximum Lateral Lengths (Feet)						
Inlet Pressure psi	12" Spacing		18" Spacing		24" Spacing	
	Nominal Flow (gph)		Nominal Flow (gph)		Nominal Flow (gph)	
	0.6	0.9	0.6	0.9	0.6	0.9
15	273	155	314	250	424	322
20	318	169	353	294	508	368
30	360	230	413	350	586	414
40	395	255	465	402	652	474
50	417	285	528	420	720	488
60	460	290	596	455	780	514

NOTES:
1. DISTANCE BETWEEN LATERAL ROWS AND EMITTER SPACING TO BE BASED ON SOIL TYPE, PLANT MATERIALS AND CHANGES IN ELEVATION. SEE INSTALLATION SPECIFICATIONS ON RAIN BIRD WEB SITE (WWW.RAINBIRD.COM) FOR SUGGESTED SPACING.
2. LENGTH OF LONGEST DRIPLINE LATERAL SHOULD NOT EXCEED THE MAXIMUM SPACING SHOWN IN THE ACCOMPANYING TABLE.
3. INSTALL AIR RELIEF VALVE AT HIGH POINTS IN DRIP LATERAL.
4. WHEN USING 17MM INSERT FITTINGS WITH DESIGN PRESSURE OVER 50PSI, IT IS RECOMMENDED THAT STAINLESS STEEL CLAMPS BE INSTALLED ON EACH FITTING.

XFS SUBSURFACE DRIPLINE ODD CURVES LAYOUT

N.T.S.

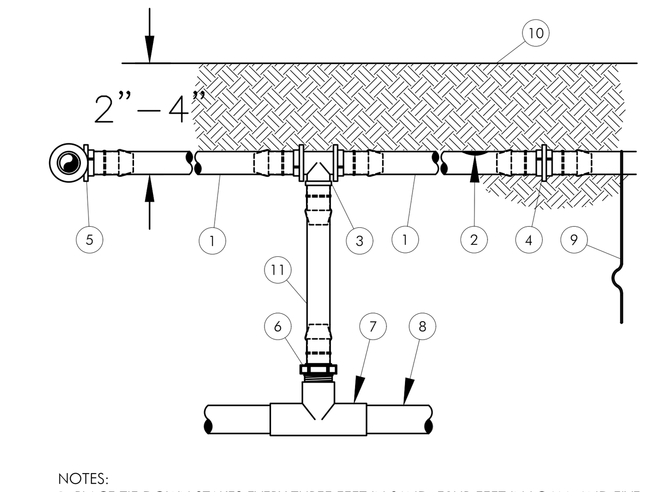

NOTES:
1. PLACE TIE DOWN STAKES EVERY THREE FEET IN SAND, FOUR FEET IN LOAM, AND FIVE FEET IN CLAY.
2. AT FITTINGS WHERE THERE IS A CHANGE OF DIRECTION SUCH AS TEES OR ELBOWS, USE TIE-DOWN STAKES ON EACH LEG OF THE CHANGE OF DIRECTION.
3. SAVE YOUR HANDS. USE THE RAIN BIRD FITTINS-TOOL XF INSERTION TOOL FOR FITTING ASSEMBLY.

1. ON-SURFACE DRIPLINE: RAIN BIRD XF SERIES DRIPLINE POTABLE: XFS DRIPLINE NON-POTABLE: XFSP DRIPLINE
2. INLINE DRIP EMITTER OUTLET, SEE PLANS FOR DRIPLINE OUTLET SPACING.
3. BARB TEE 17x17x17mm RAIN BIRD XFF-TEE
4. BARB COUPLING 17x17mm RAIN BIRD XFF-COUP
5. BARB ELBOW 17x17mm RAIN BIRD XFF-ELBOW
6. BARB MALE ADAPTER 17mm X 1/2" MPT RAIN BIRD XFF-MA-050 17mm X 3/4" MPT RAIN BIRD XFF-MA-075
7. PVC TEE SxSxT
8. PVC LATERAL SUPPLY HEADER
9. TIE DOWN STAKE: RAIN BIRD TDS-050 WITH BEND (TYPICAL)
10. FINISH GRADE
11. RAIN BIRD XF SERIES BLANK TUBING LENGTH AS REQUIRED

XFS SUBSURFACE DRIPLINE RISER ASSEMBLY

N.T.S.

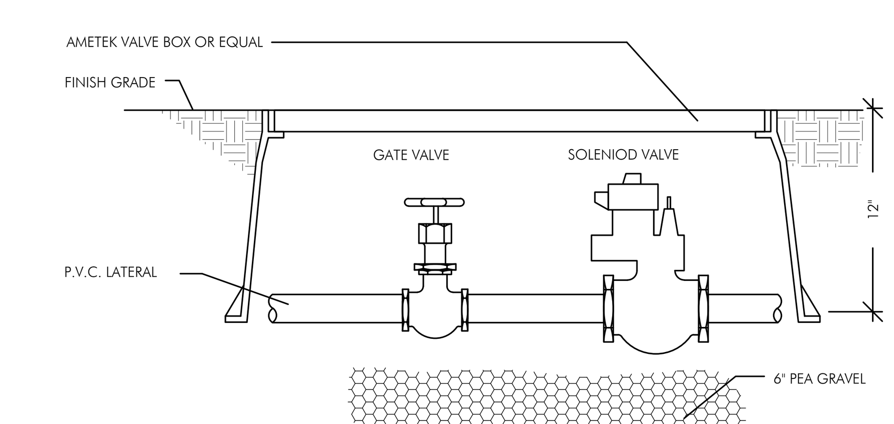

TYPICAL SOLENOID VALVE ASSEMBLY

N.T.S.

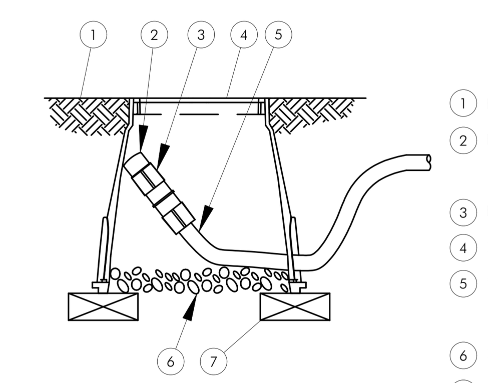

1. FINISH GRADE
2. FLUSH CAP FOR EASY FIT COMPRESSION FITTINGS: POTABLE:RAIN BIRD MDCFCAP NON-POTABLE: RAIN BIRD MDCFPCAP
3. EASY FIT COUPLING: RAIN BIRD MDCFCOUP
4. SUBTERRANEAN EMITTER BOX: RAIN BIRD SEB 7XB
5. SUB-SURFACE DRIPLINE: RAIN BIRD XF SERIES DRIPLINE POTABLE: XFS DRIPLINE NON-POTABLE: XFSP DRIPLINE
6. 3-INCH MINIMUM DEPTH OF 3/4-INCH WASHED GRAVEL
7. BRICK (1 OF 2)

NOTE:
1. ALLOW A MINIMUM OF 6-INCHES OF DRIPLINE TUBING IN VALVE BOX IN ORDER TO DIRECT FLUSHED WATER OUTSIDE VALVE BOX.

XFS DRIPLINE FLUSHPOINT WITH COMPRESSION FITTINGS

N.T.S.

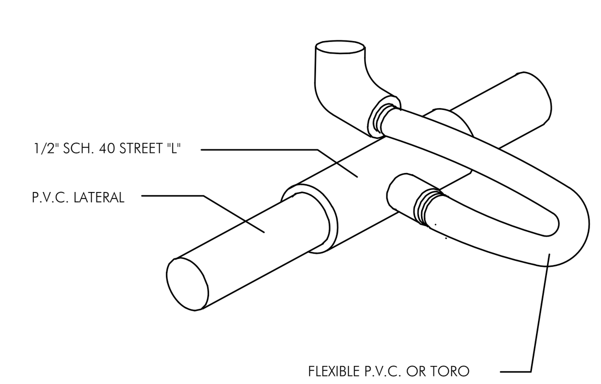

FLEXIBLE SWING JOINT DETAIL

N.T.S.

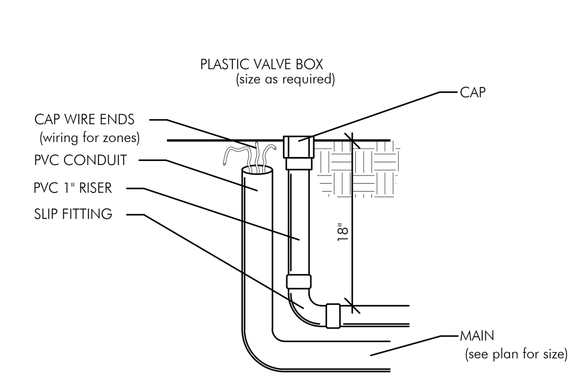

DETAIL OF STUB-OUT FOR FUTURE USE

N.T.S.

NOTE:
ALL WIRE CONNECTIONS SHALL BE APPROVED WATERTIGHT CONNECTIONS.
FINISH ENTIRE ASSEMBLY, EXCEPT FOR EQUIPMENT, WITH FLAT BLACK ACRYLIC ENAMEL PAINT.
PRIME METALLIC SURFACES WITH ZINC CHROMATE PRIOR TO FINISHING.

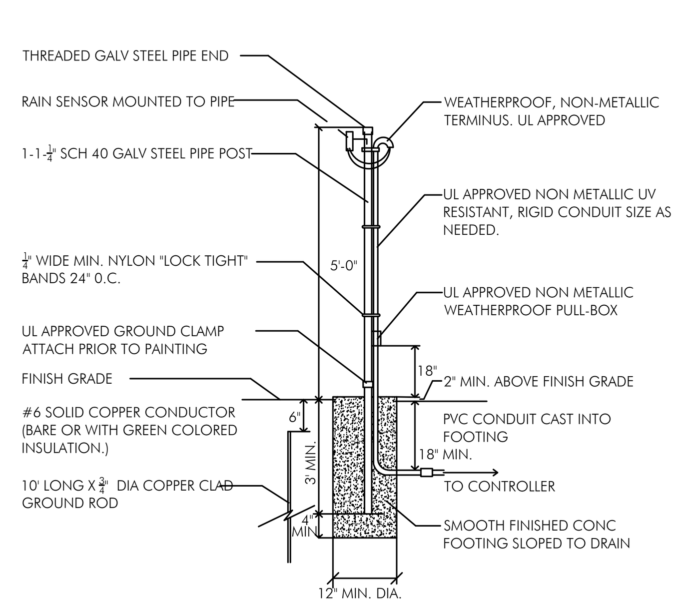

RAIN SENSOR DETAIL

N.T.S.

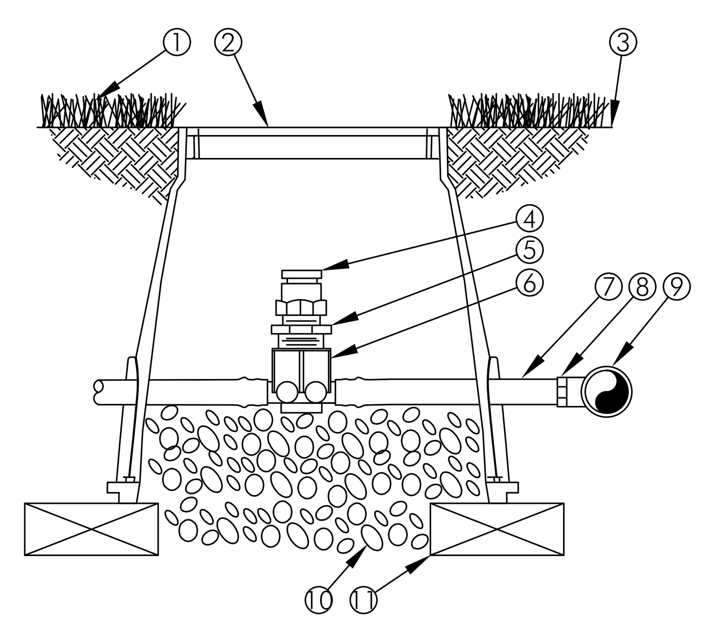

1. TURF GRASS
2. SUBTERRANEAN EMITTER BOX: RAIN BIRD SEB 7XB
3. FINISH GRADE
4. ½" AIR RELIEF VALVE: RAIN BIRD ARV050 TO BE INSTALLED AT HIGH POINTS IN DRIP ZONE
5. ½" X ¾" PVC REDUCER BUSHING
6. BARB X FEMALE THREAD CONNECTOR: RAIN BIRD XFD-TFA FITTING
7. ½" BLANK DRIPLINE TUBING: RAIN BIRD XF SERIES
8. BARB X MALE THREAD CONNECTOR: RAIN BIRD XFF-MA FITTING
9. PVC TEE CONNECTED TO PVC HEADER PIPE
10. 3" MINIMUM DEPTH OF ¾" WASHED GRAVEL
11. BRICK (1 OF 2)

XFS AIR/VACUUM RELIEF

N.T.S.

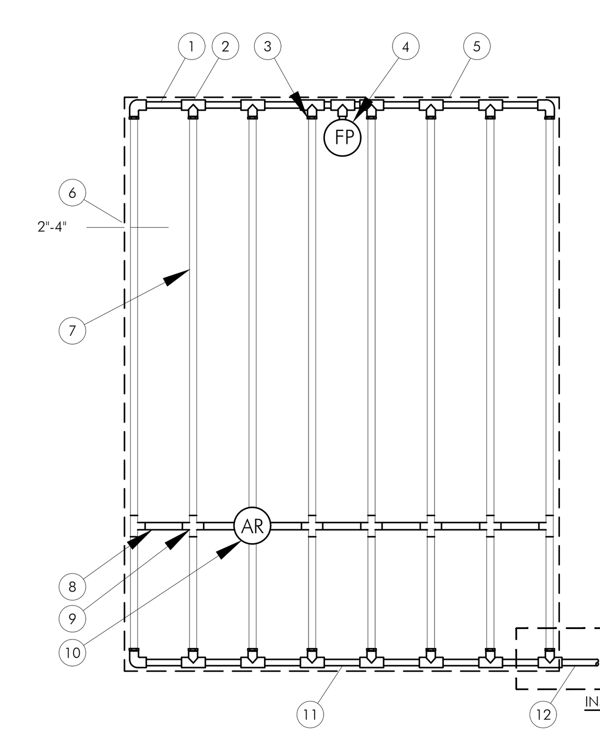

1. PVC EXHAUST HEADER
2. PVC SCH 40 TEE OR EL (TYPICAL)
3. BARB X MALE FITTING: RAIN BIRD XFF-MA FITTING (TYPICAL)
4. FLUSH POINT (TYPICAL) SEE RAIN BIRD DETAIL "XFS FLUSH POINT" OR "XFS FLUSH POINT WITH BALL VALVE"
5. PERIMETER OF AREA
6. PERIMETER DRIPLINE PIPE TO BE INSTALLED 2"-4" FROM PERIMETER OF AREA
7. SUB-SURFACE DRIPLINE: RAIN BIRD XF SERIES DRIPLINE (TYPICAL) POTABLE: XFS DRIPLINE NON-POTABLE: XFSP DRIPLINE
8. RAIN BIRD XF SERIES BLANK TUBING
9. BARB X BARB INSERT TEE OR CROSS: RAIN BIRD XFF-TEE OR RAIN BIRD XFD-CROSS (TYPICAL)
10. ½" AIR RELIEF VALVE: RAIN BIRD MODEL: ARV050 SEE RAIN BIRD XFS DETAILS FOR AIR RELIEF INSTALLATION
11. PVC SUPPLY HEADER
12. PVC DRIP MANIFOLD FROM RAIN BIRD CONTROL ZONE VALVE KIT (SIZED TO MEET LATERAL FLOW DEMAND)
13. PVC SCH 40 RISER PIPE

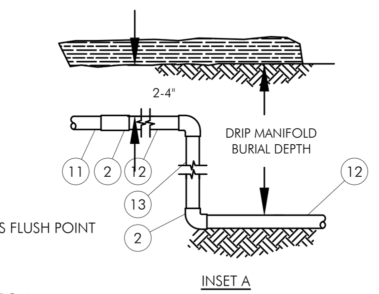

XFS Dripline Maximum Lateral Lengths (Feet)						
Inlet Pressure psi	12" Spacing		18" Spacing		24" Spacing	
	Nominal Flow (gph)		Nominal Flow (gph)		Nominal Flow (gph)	
	0.6	0.9	0.6	0.9	0.6	0.9
15	273	155	314	250	424	322
20	318	169	353	294	508	368
30	360	230	413	350	586	414
40	395	255	465	402	652	474
50	417	285	528	420	720	488
60	460	290	596	455	780	514

NOTES:
1. DISTANCE BETWEEN LATERAL ROWS AND EMITTER SPACING TO BE BASED ON SOIL TYPE, PLANT MATERIALS AND CHANGES IN ELEVATION. SEE RAIN BIRD XFS DRIPLINE INSTALLATION GUIDE FOR SUGGESTED SPACINGS.
2. LENGTH OF LONGEST DRIPLINE LATERAL SHOULD NOT EXCEED THE MAXIMUM LENGTH SHOWN IN THE ACCOMPANYING TABLE.
3. AIR RELIEF VALVE TO BE INSTALLED AT HIGH POINT OF AREA.
4. WHEN USING 17MM INSERT FITTINGS WITH DESIGN PRESSURE OVER 50PSI, IT IS RECOMMENDED THAT STAINLESS STEEL CLAMPS BE INSTALLED ON EACH FITTING.

XFS SUBSURFACE DRIPLINE END FEED LAYOUT

N.T.S.

MAINTENANCE NOTES FOR DRIPPER IRRIGATION:
A. ALL DRIPPER LINE SHALL BE CHECKED WEEKLY TO ENSURE THAT IT IS COVERED BY MULCH AND FLOWING PROPERLY.
B. ANY BREAKS ENCOUNTERED ARE TO BE FIXED IMMEDIATELY.
C. DRIPPER LINE FILTERS SHALL BE MAINTAINED TO ENSURE THEY ARE ALWAYS CLEAN.

*NOTE:
All main, lateral, and valve locations are shown schematically and shall be adjusted in the field. Locate mains and laterals in landscape areas (preferably at edges of curbs or walks.) Coordinate pipe locations with existing and proposed rootball locations. Group and locate valve at edges of shrub beds where feasable.

idea Architect
absolute-idea.com
CANAL PARK
3323 NE 163rd Street, Suite 200 North Miami Beach, FL 33160
t 305.792.0015 f 305.931.0279 @ info@absolute-idea.com

SEAL
REGISTERED LANDSCAPE ARCHITECT KENNETH ERIC GARDNER LA 0001569 STATE OF FLORIDA
Printed copies of this document are not considered signed and sealed and the signature must be verified on any electronic copies
Digitally signed by Ken Gardner
DN: c=US, st=Florida, serialNumber=AATL2024020 8335601, o=GSLA Design, cn=Ken Gardner, email=ken@gsladesign.com
Date: 2025.01.28 10:34:01 -05'00'
KEN GARDNER
FL LA 1569
TO THE BEST OF MY KNOWLEDGE, THE PLANS AND SPECIFICATIONS COMPLY WITH THE APPLICABLE MINIMUM BUILDING CODES AND THE APPLICABLE FIRE-SAFETY STANDARDS AS DETERMINED BY THE LOCAL AUTHORITY IN ACCORDANCE WITH THIS SECTION AND 633 FLORIDA STATUES.

Professionals
idea Architect
FLYNN ENGINEERING (CELEBRATING 30 YEARS)
GSLA DESIGN

REV.	DATE	DESCRIPTION
01	XX-XX-2024	D.R.C. SUBMITTAL

ALL MEASUREMENTS MUST BE VERIFIED BEFORE BEGINNING THE WORKS. NO MEASUREMENTS ARE TO BE SCALED DIRECTLY FROM THIS DRAWING.

Key section

PROGRESS SET

Client
VERA FUND
NICK POLYUSHKIN
& YURI KHARITONENKOV
TEL: 305.833.3303

Project
1600 S FEDERAL HIGHWAY (MIXED-USE PROJECT)
1600 SOUTH FEDERAL HIGHWAY, POMPANO BEACH, FL 33062

Title
IRRIGATION DETAILS & SPECIFICATIONS

Drawn: GSLA
Field: LANDSCAPE ARCH
Verified: KG
Scale: as shown
Approved: KG
Date: 10-09-2024
Project manager: KG
Dwg. no.: L-307
Project: 24-838

DRC
PZ24-12000427
03/05/2025